QJAR

QJR130-3100M



HASKOM Automation
"We Understand Robotics"

Authorized distributor HASKOM Automation s.r.o.
Find out more at qjar.eu

CE

1, Basic specification table of QJR130-3100M robot

QJR130-3100M basic specification table			
Organization form		4-axis palletizing	
freedom		4	
Payload		130kg	
Brachial abduction		3157mm	
Repeat positioning accuracy ^ 2		±0.5mm	
Mechanical limit range	1 axis	±182°	
	2 axis	+97° , -50°	
	3 axis	Global : +122° , -22°	
		Coupling : +71° , -82°	
	4 axis	±360°	
Maximum speed	1 axis	2.25 rad/s	128 °/s
	2 axis	2.3 rad/s	131 °/s
	3 axis	2.3 rad/s	131 °/s
	4 axis	5.2 rad/s	297 °/s
Maximum acceleration	1 axis	2.2 rad/s^2	126 °/s^2
	2 axis	7 rad/s^2	401 °/s^2
	3 axis	8 rad/s^2	458 °/s^2
	4 axis	40 rad/s^2	2291 °/s^2
Moment of inertia	4 axis	23 kg.m^2	
Body weight		1400kg	
Installation environment	temperature	0~45 ℃	
	humidity	20%~80% RH(No condensation)	
	Vibration	<4.9m/s^2 (0.5G)	
	others	Avoid flammable and corrosive gases and liquids; Avoid contact with water, oil, dust, etc; Keep away from electrical noise sources.	
Power capacity		17.5kVA	

2, Load diagram of QJR130-3100M robot

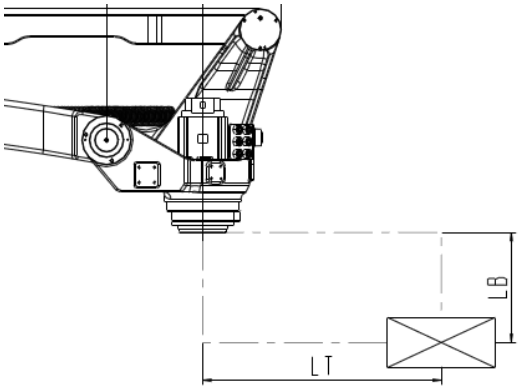

Load diagram (the center of 4 axis is zero)

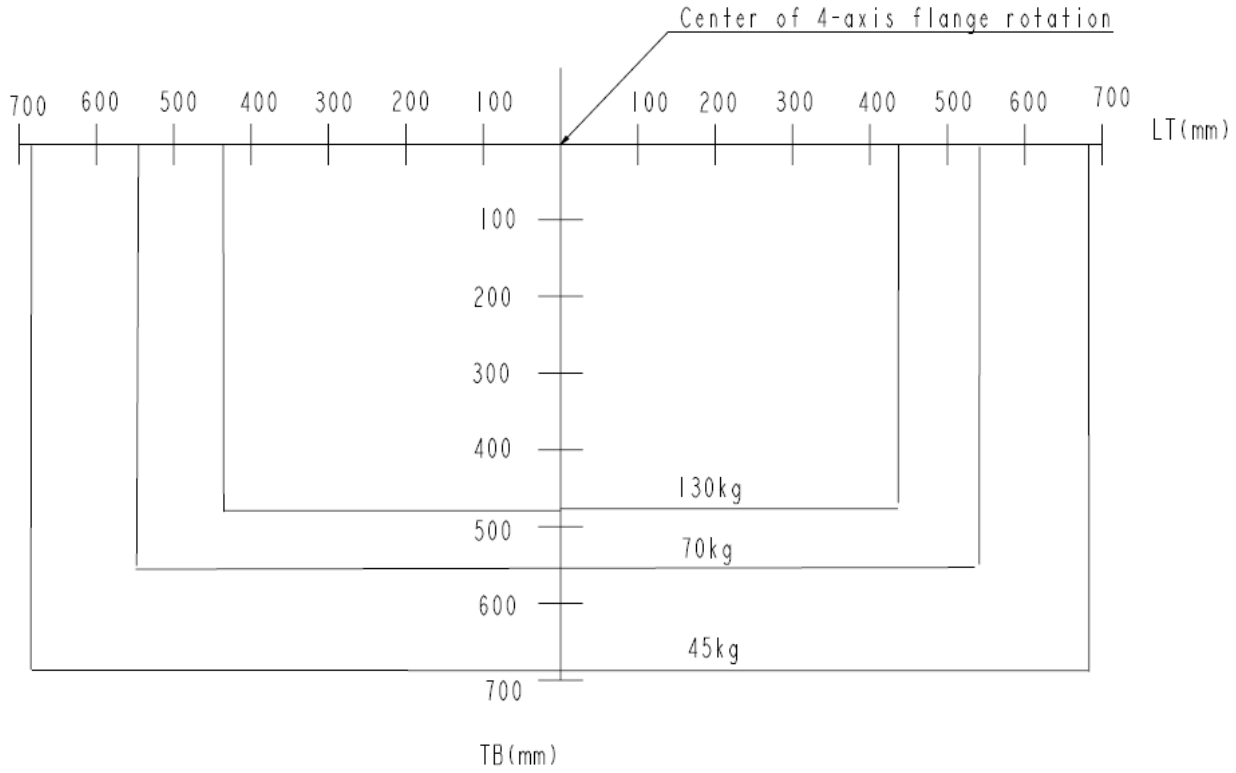

3, Outline dimension and maximum action range diagram of QJR130-3100M robot

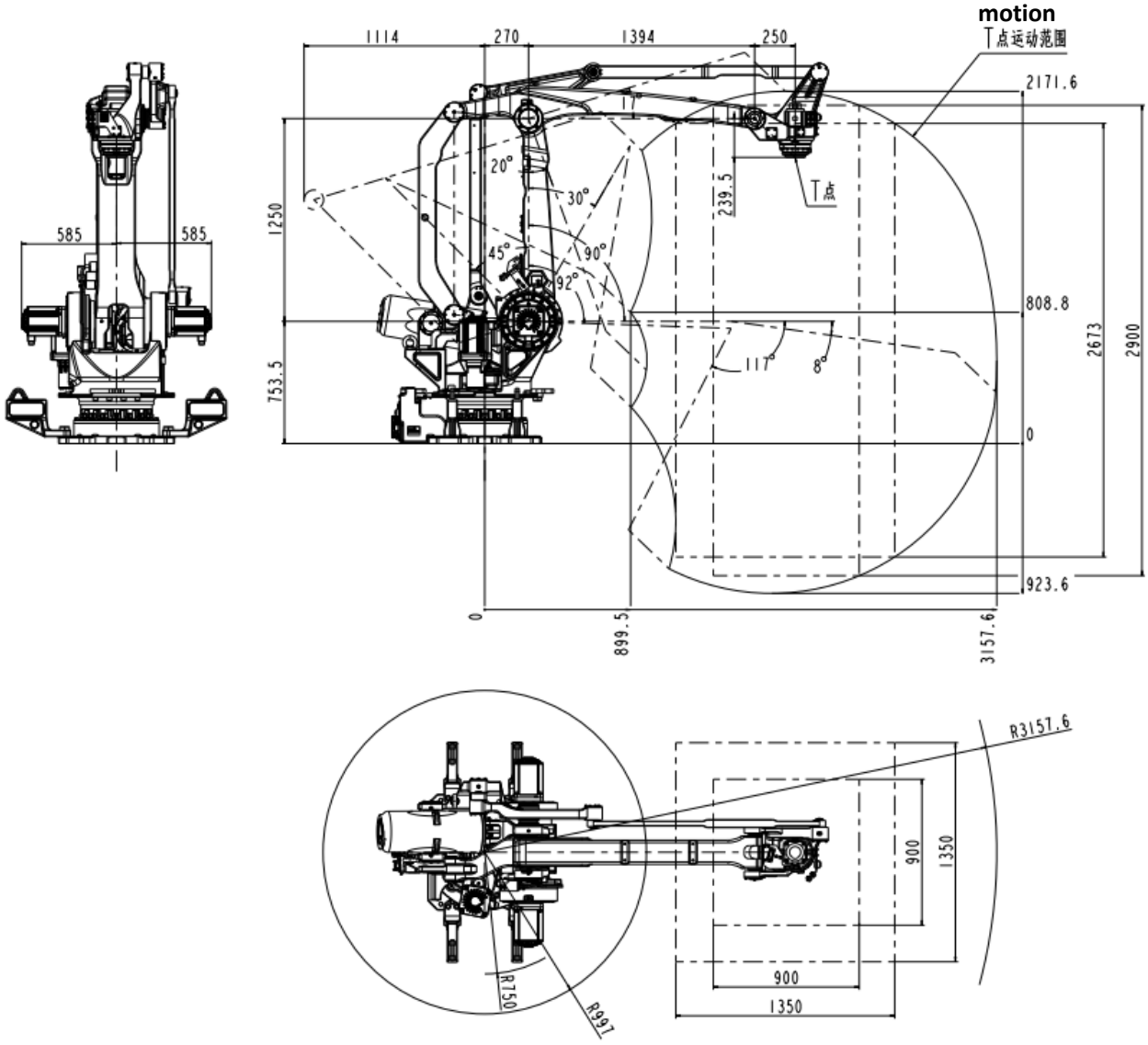

4, Installation dimension drawing of QJR130-3100M robot base

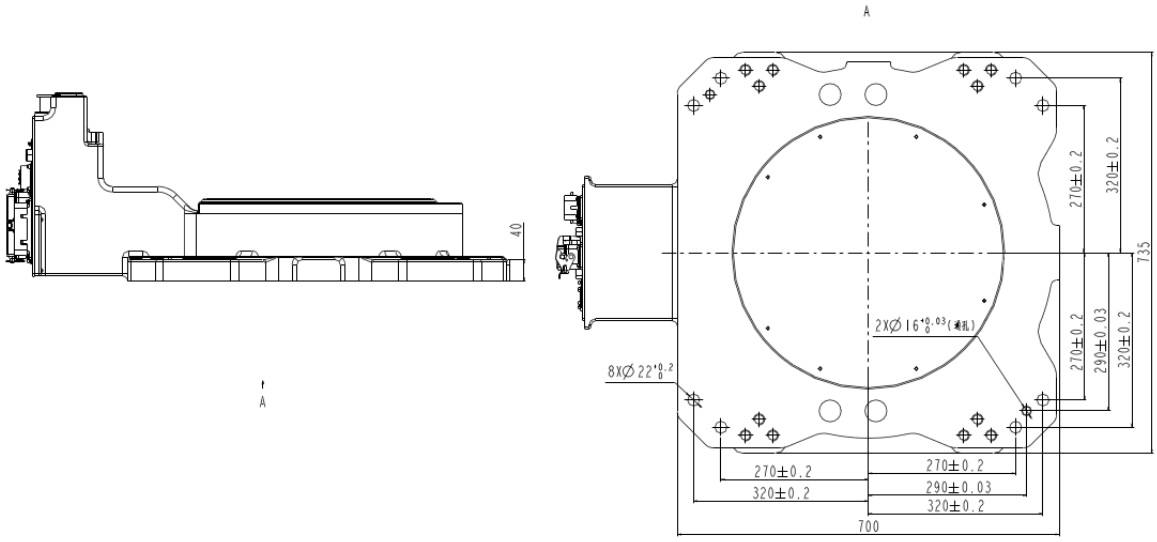

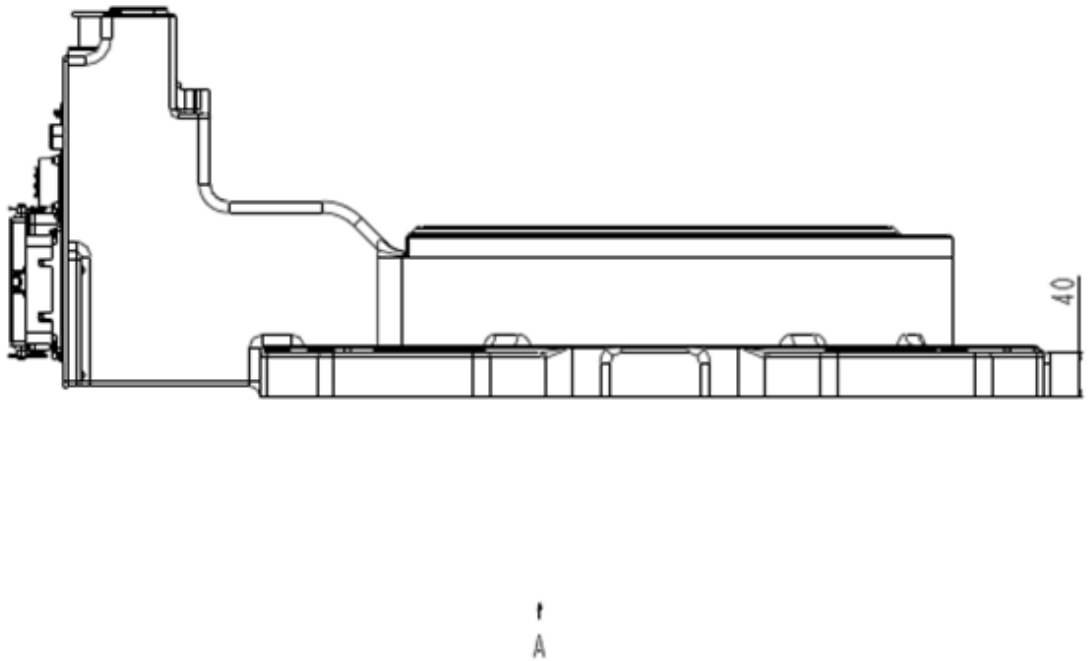

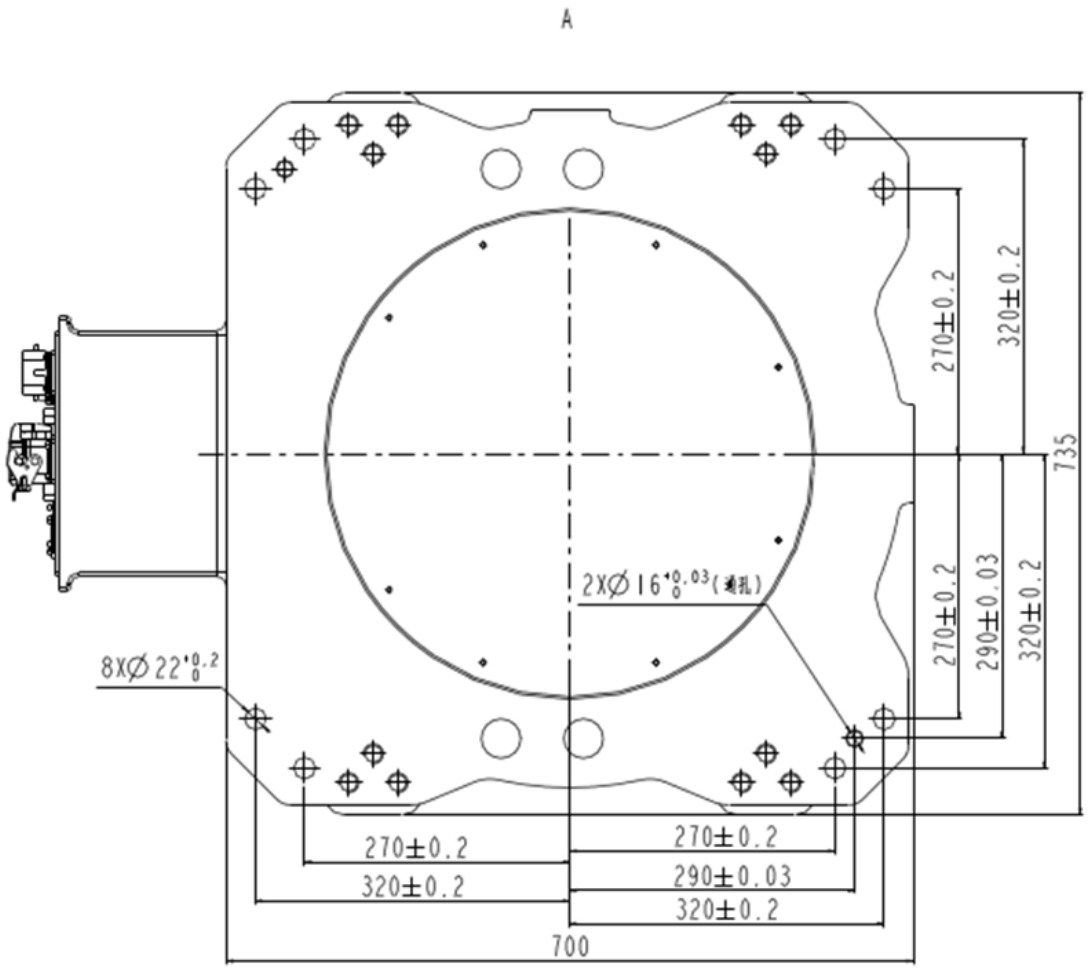

5, Installation dimension drawing of QJR130-3100M robot end

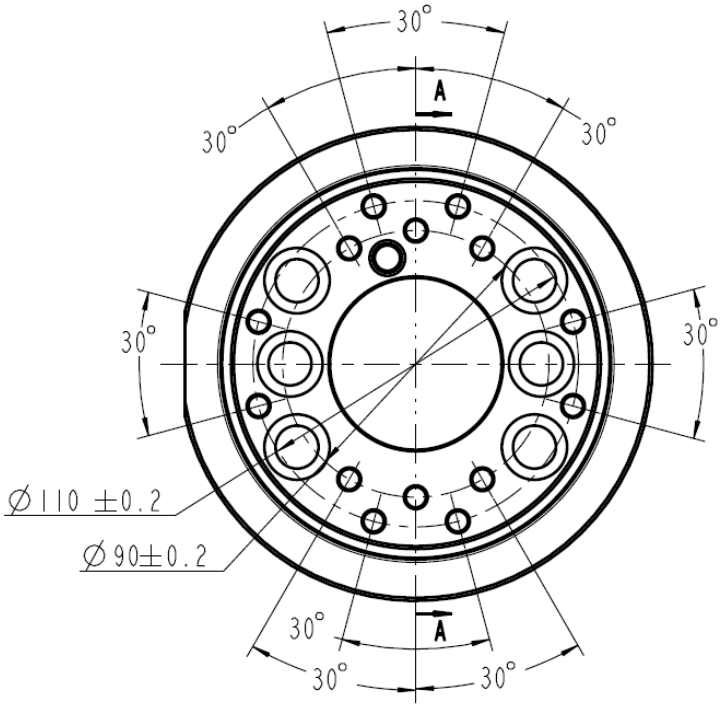
30°
30°
30°
30°
30°
A
A
∅110 ±0.2
∅90±0.2

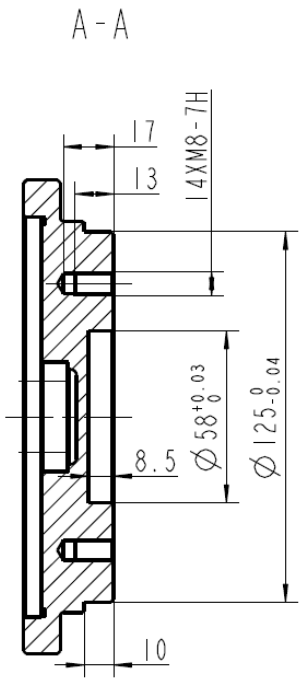
A-A
17
13
14XM8-7H
8.5
∅58 +0.03 0
∅125 0 -0.04
10

6, Schematic diagram of the position of the air circuit and I / O interface of the machine

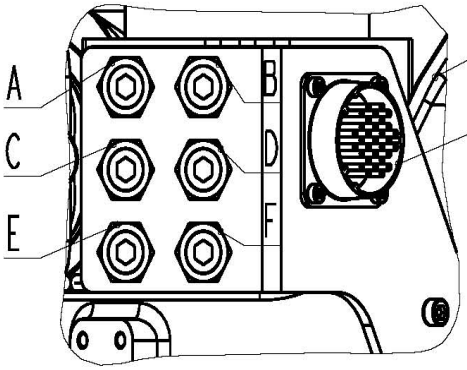

wrist
Round connection socket WY40J31Z-3, I / O line; 0.2mm² ×12P
Pair; round connector plug WY40K31TE-3,
Cold pressing master pin YKI.5-22.6-0.37AU
(0.37AU, optional)

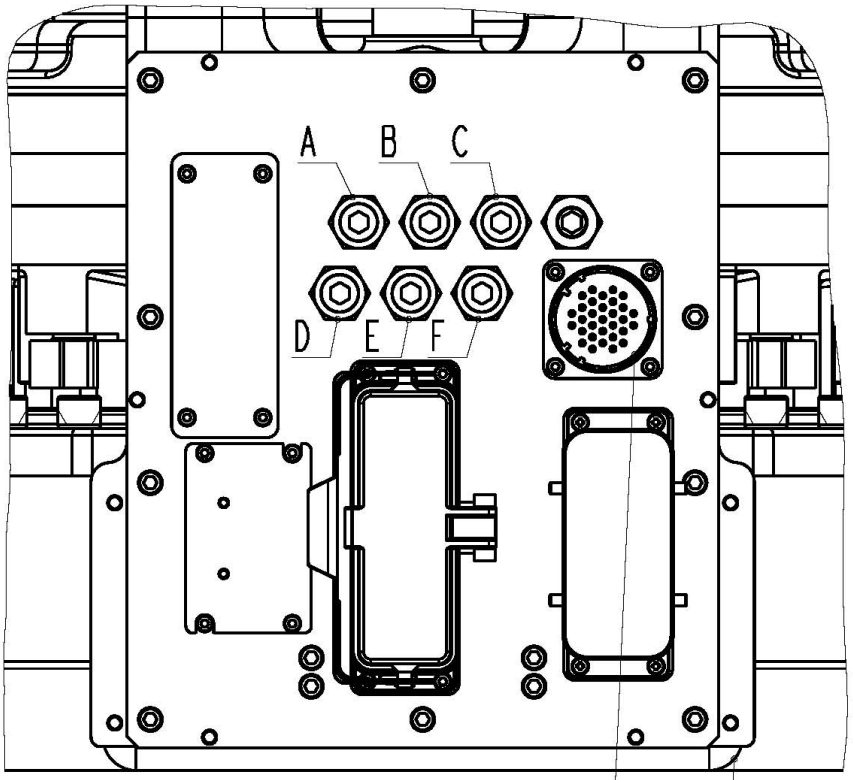

圆形连接器插座WY40J31Z-3，I/O线：0.2mm^{2}X12P。　　底座

配对：圆形连接器插头WY40K31TE-3，

冷压母针YKI.5-22.6-0.37AU

（0.37AU可根据需要另选）。

说明：

1、底座A、B、C、D、E、F为进气口，R3/8螺纹，带锥塞，气管外径为∅10mm；

2、腕部A、B、C、D、E、F为出气口，R3/8螺纹，带锥塞，气管外径为∅10mm；

3、底座和腕部位置圆形连接器插座的同位置连通。

Round connection socket WY40J31Z-3, I / O line; 0.2mm^2 ×12P

Pair; round connector plug WY40K31TE-3,

Cold pressing master pin YKI.5-22.6-0.37AU

(0.37AU, optional)

explain:

1. Base A, B, C, D, E and F are air inlet, R3 / 8 thread, with taper plug, and the outer diameter of air pipe is ϕ / 0mm;

2. Wrist A, B, C, D, E, F are air outlets, R3 / 8 thread, with taper plug, and the outer diameter of air tube is ϕ / 0 mm;

3. The base and the wrist are connected at the same position of the circular connector socket.

7, Configuration table of QJR130-3100M robot products

QJR130-3100M Robot finished product configuration table	
Motor	Gaohua Chuangke
RV Reducer	Domestic RV Reducer
controller	KEBA
Driver	Tsino dynatron

8, Configuration information of QJR130-3100M control cabinet

QJR130-3100M Control cabinet	
Control hardware	KEBA
Control cabinet software	KEBA
Power Supply	Three phase five wire AC380V(+10%,-10%)
Rated power	20.5KW
Power capacity	17.5KVA
Control cabinet size	650x750x1150mm
Weight of control cabinet	140kg
ambient temperature	0-45℃
Maximum humidity	20%~80% RH（No condensation）
Protection level	IP54
operation panel	On the control cabinet
Programming unit	Color touch screen teaching box
Security	Emergency stop, automatic mode stop, remote mode stop

Input and output	Digital IO 22 input 24 output