QJAR

QJR260-3100M



HASKOM Automation
"We Understand Robotics"

Authorized distributor HASKOM Automation s.r.o.
Find out more at qjar.eu

CE

1, Basic specifications of QJR260-3100M robot

Basic specifications of QJR260-3100M robot			
Organization form		4-axis palletizing	
Freedom		4	
Payload		260kg	
Abduction of arms		3157mm	
Repeat positioning accuracy ^ 2		±0.5mm	
Mechanical limit range	1 axis	±182°	
	2 axis	+97° , -50°	
	3 axis	+112° , -22°	
	4 axis	±360°	
Maximum speed	1 axis	1.7rad/s	97°/s
	2 axis	1.7rad/s	97°/s
	3 axis	1.7rad/s	97°/s
	4 axis	5.2rad/s	297°/s
Maximum acceleration	1 axis	1.3rad/s^2	74 °/s^2
	2 axis	3.5rad/s^2	200 °/s^2
	3 axis	3rad/s^2	171 °/s^2
	4 axis	20rad/s^2	1145°/s^2
Moment of inertia	4 axis	41.6kg.m^2	
Robot weight		1400kg	
Installation environment	temperature	0~45 ℃	
	humidity	20%~80% RH(No dewing)	
	Vibration	<4.9m/s^2 (0.5G)	
	other	Avoid flammable and corrosive gases and liquids; Avoid contact with water, oil, dust, etc; Keep away from electrical noise sources.	
Power capacity		19.3kVA	

2, QJR260-3100M robot load diagram

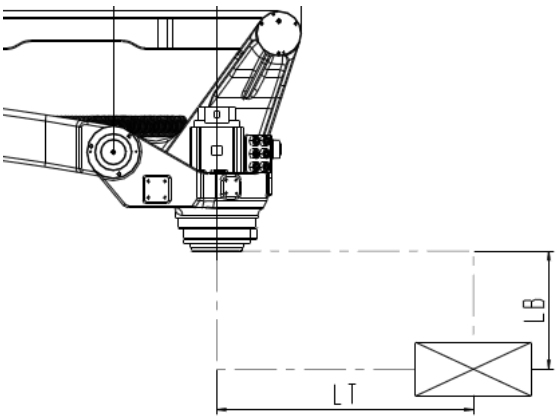

Load diagram (4 axis center is zero point)

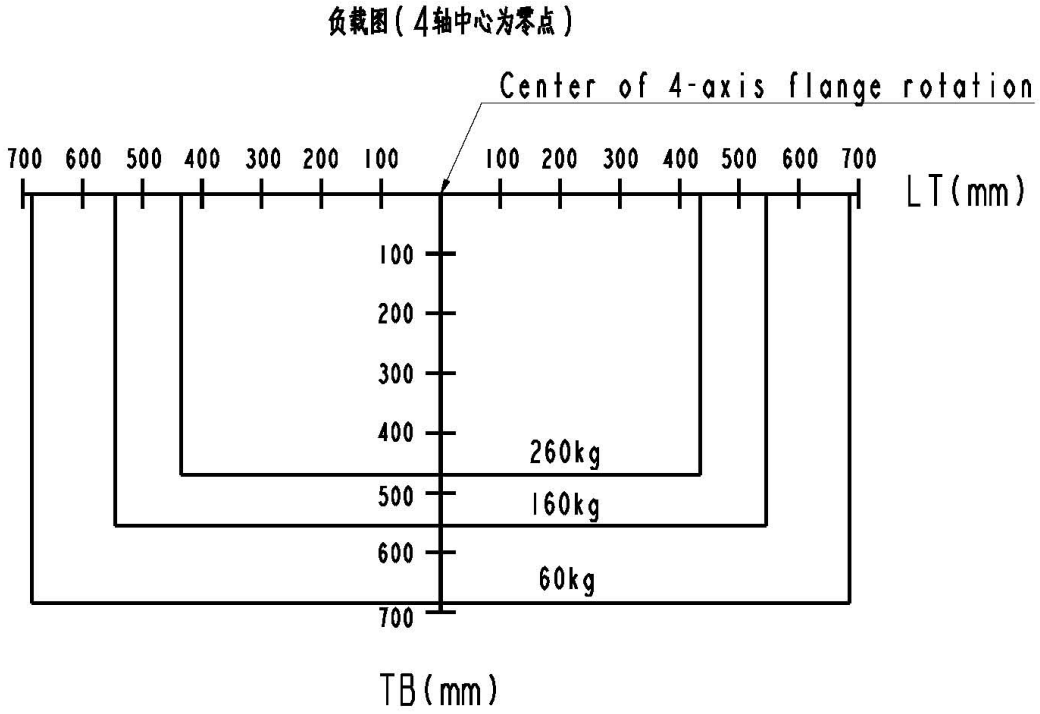

3, Outline dimension and maximum action range of QJR260-3100M robot

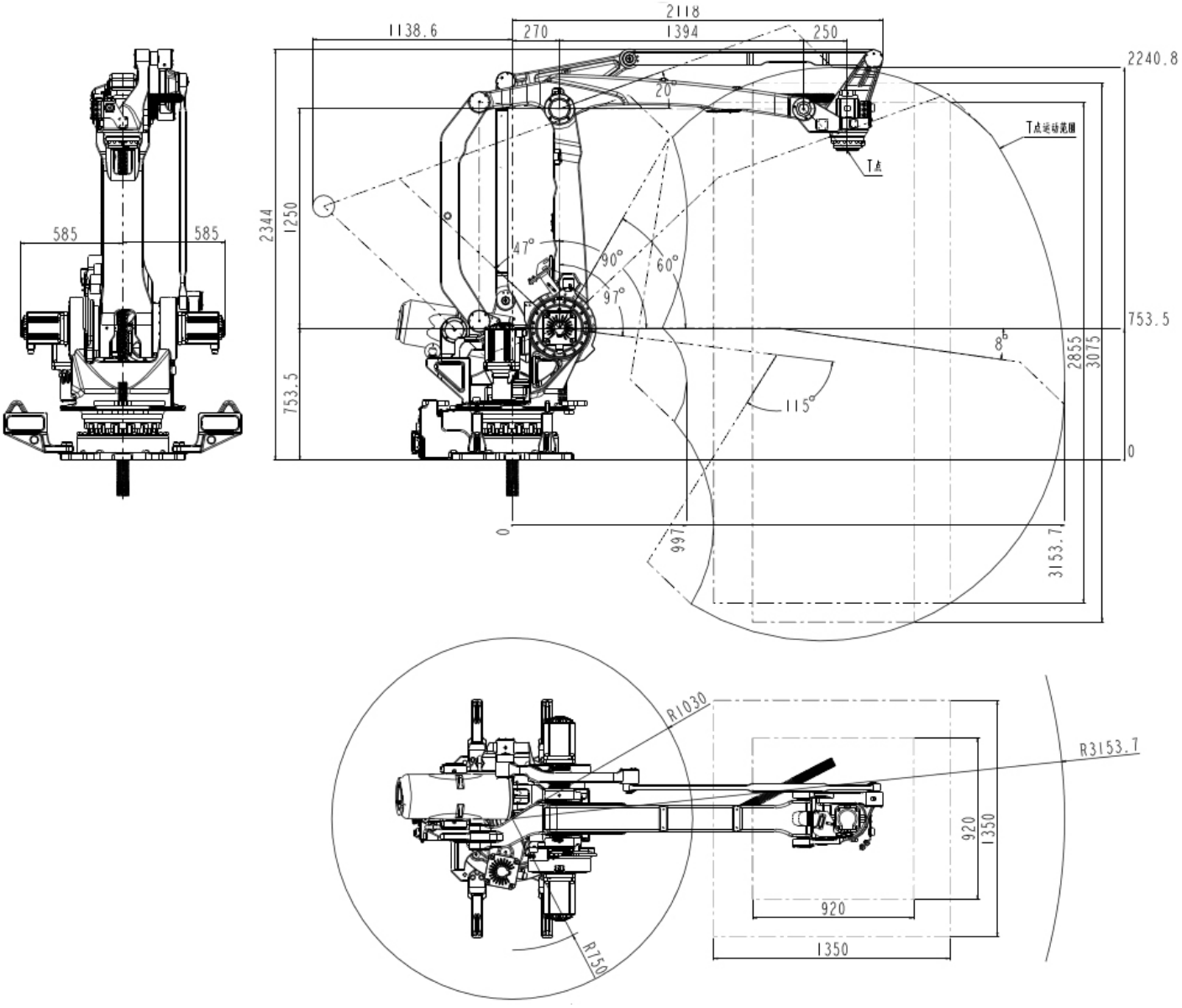

4, Installation dimension drawing of QJR260-3100M robot base

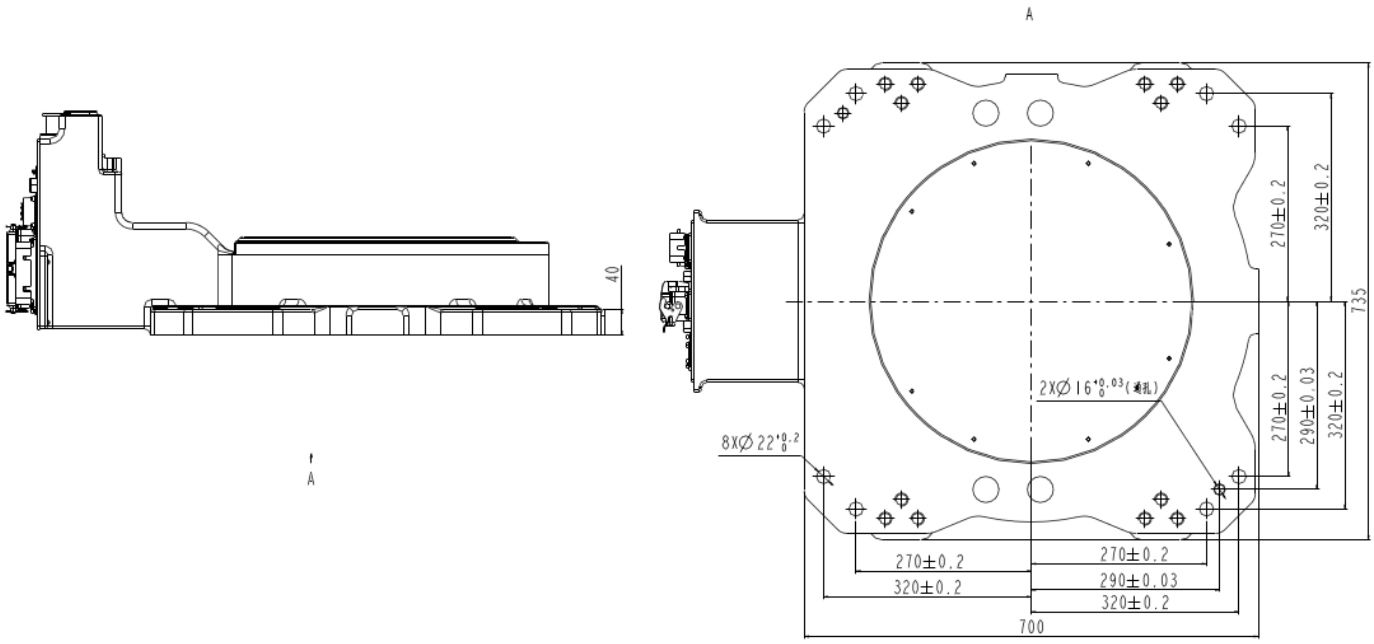

5, End installation dimension drawing of QJR260-3100M robot

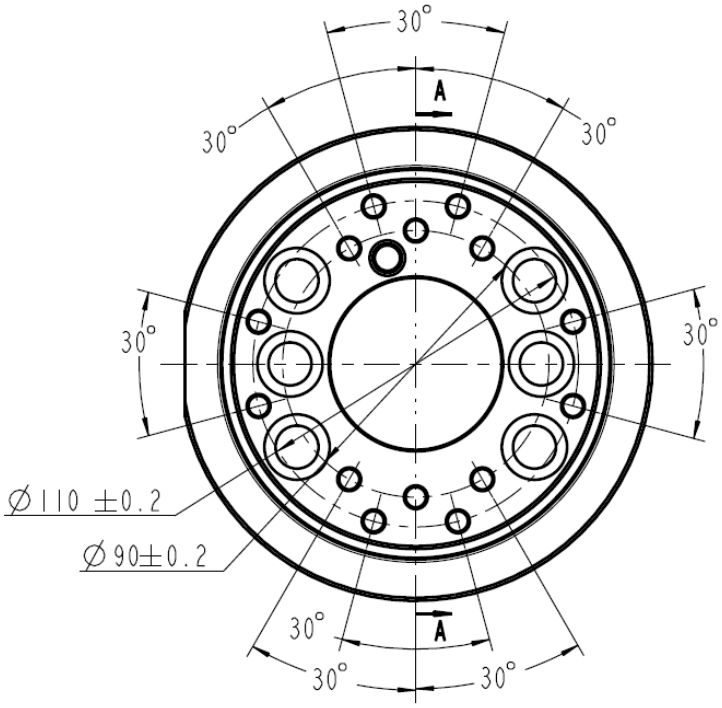
30°
30°
30°
30°
30°
A
A
∅110 ±0.2
∅90±0.2

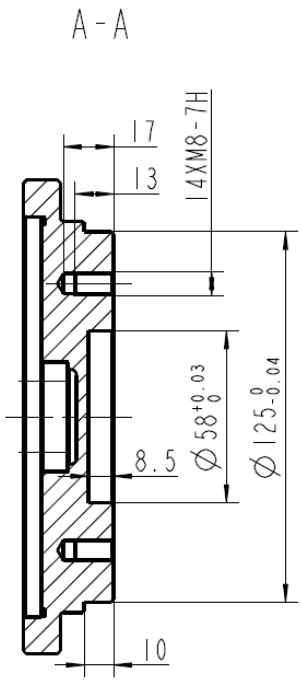
A-A
17
13
14XM8-7H
8.5
∅58 +0.03 0
∅125 0 -0.04
10

6, Schematic diagram of the position of the reserved air path and I / O interface of the robot

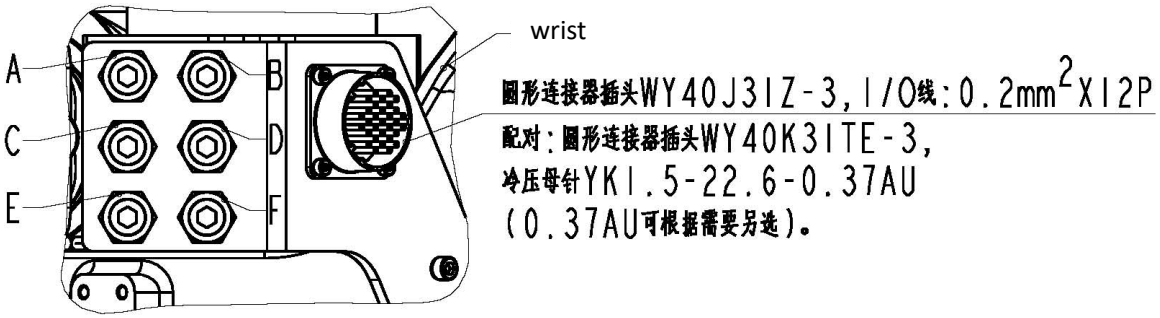

Circular connector plug WY40J3IZ-3, I/O wire : 0.2mm²XI2P

Pairing: round connector plug WY40K3ITE-3,

Cold pressing female pin YKI.5-22.6-0.37AU

(0.37AU can be selected separately as required).

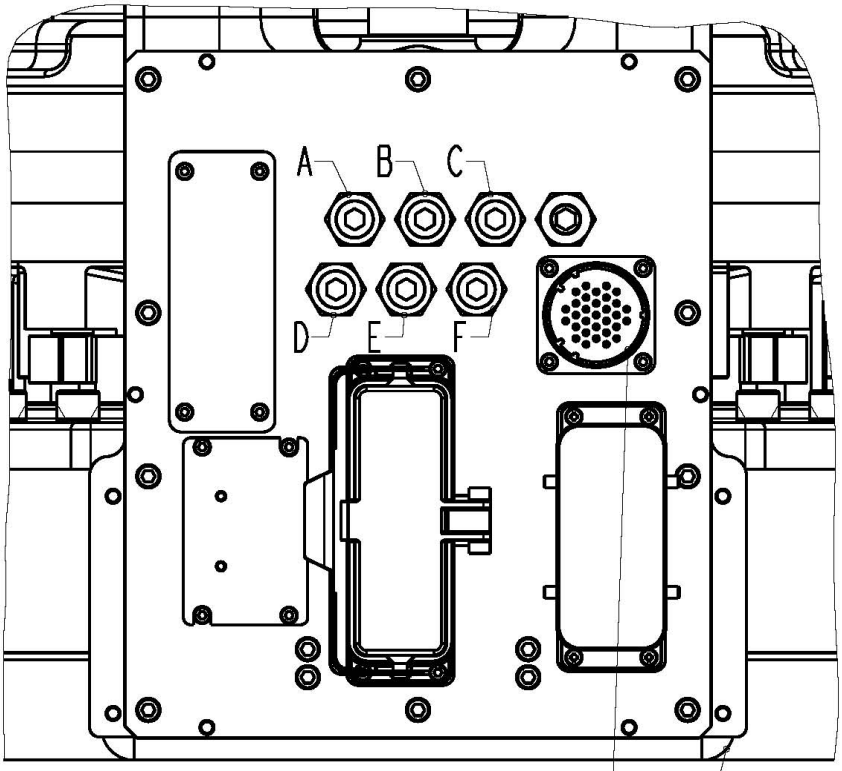

圆形连接器插头WY40J3IZ-3，I/O线：0.2mm^{2}XI2P Base

配对：圆形连接器插头WY40K3ITE-3，
冷压母针YKI.5-22.6-0.37AU
（0.37AU可根据需要另选）。

说明：

1、底座A、B、C、D、E、F为预留气路进气口，R3/8螺纹，带锥塞，气管外径为∅10mm；

2、腕部A、B、C、D、E、F为预留气路出气口，R3/8螺纹，带锥塞，气管外径为∅10mm；

3、底座和腕部位置圆形连接器插头的同位置连通。

Circular connector plug WY40J3IZ-3, I/O wire：0.2mm²XI2P

Pairing: round connector plug WY40K3ITE-3,

Cold pressing female pin YKI.5-22.6-0.37AU

(0.37AU can be selected separately as required).

Explain:

1. Base a, B, C, D E, f is the reserved air inlet, R3 / 8 thread, with taper plug, and the outer diameter of air pipe is Φ 10 mm

2. Wrist a, B, C, D E, f are reserved air outlet, R3 / 8 thread, with taper plug, and the outer diameter of air pipe is Φ 10 mm

3. The bottom is connected with the same position of the circular connector plug at the wrist position.

7, QJR260-3100M Robot finished product configuration table

QJR260-3100MRobot finished product configuration table	
Motor	Gao hua chuang ke motor
RV Reducer	Domestic RV Reducer
controller	KEBA
Drive	Tsino Dynatron

8, QJR260-3100M Configuration information of control cabinet

QJR260-3100M Control cabinet	
Control hardware	KEBA
Control cabinet software	KEBA
Power Supply	Three phase five wire AC380V(+10%,-10%)
Rated power	22.6KW
Power capacity	19.3KVA
Control cabinet size	650x750x1150mm
Weight of control cabinet	140kg
ambient temperature	0-45℃
Maximum humidity	20%~80% RH (No dewing)
Degree of protection	IP54
operation panel	On the control cabinet
Programming unit	Color touch screen teaching box
Security	Emergency stop, automatic mode stop, remote mode stop
I / O	Digital IO 22 input 24 output