QJAR

QJR6-2000H



HASKOM Automation
"We Understand Robotics"

Authorized distributor HASKOM Automation s.r.o.
Find out more at qjar.eu

CE

QJAR 钱江机器人

1. Basic specifications of QJR6-2000H robot

Basic specifications of QJR6-2000H			
Institutional form		Vertical multi joint type	
Freedom		6	
Payload		6kg	
Arm spread		2014mm	
Repeat positioning accuracy ^2		±0.08mm	
Mechanical limit range	1 axis	±175°	
	2 axis	+159° , -95°	
	3 axis	+95° , -125°	
	4 axis	±183°	
	5 axis	+129° , -126°	
	6 axis	±360°	
Maximum speed	1 axis	3.3rad/s	189 °/s
	2 axis	3.3rad/s	189 °/s
	3 axis	3.3rad/s	189 °/s
	4 axis	6.3 rad/s	360 °/s
	5 axis	5.6 rad/s	320 °/s
	6 axis	17 rad/s	974 °/s
Allowable torque	4 axis	8.81N.m	
	5 axis	8.81N.m	
	6 axis	3.14N.m	
Moment of inertia	4 axis	0.2kg.m^2	
	5 axis	0.2kg.m^2	
	6 axis	0.03kg.m^2	
Body weight		230 kg	
Installation environment	temperature	0~45 ℃	
	humidity	20%~80% RH(No condensation)	
	Vibration	<4.9m/s^2 (0.5G)	
	other	Avoid flammable and corrosive gases and liquids; Avoid contact with water, oil, dust, etc; Keep away from electrical noise sources.	
Power capacity		3.4kVA	

2. QJR6-2000H robot acceleration configuration table and corresponding load diagram

(1). Upper load limit 6kg status :

QJR6-2000H Accelerometer configuration table			
Maximum acceleration	1 axis	13 rad/s²	744.8°/ s²
	2 axis	10 rad/s²	572.9°/ s²
	3 axis	30 rad/s²	1718.8°/ s²
	4 axis	50 rad/s²	2864.8°/ s²
	5 axis	35 rad/s²	2005.3°/ s²
	6 axis	80 rad/s²	4583.6°/ s²
Upper load limit		6kg	

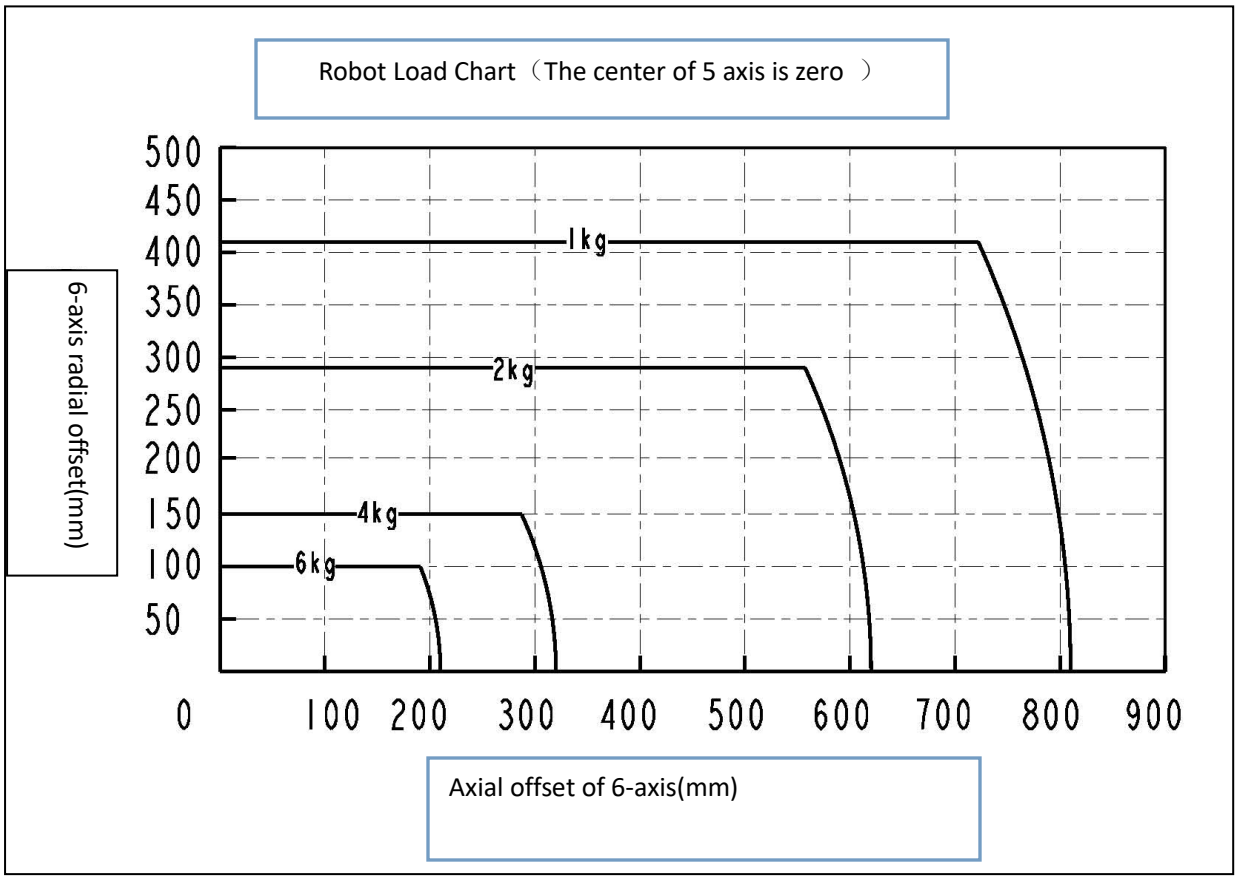

3. Outline dimensions and maximum action range of QJR6-2000H robot

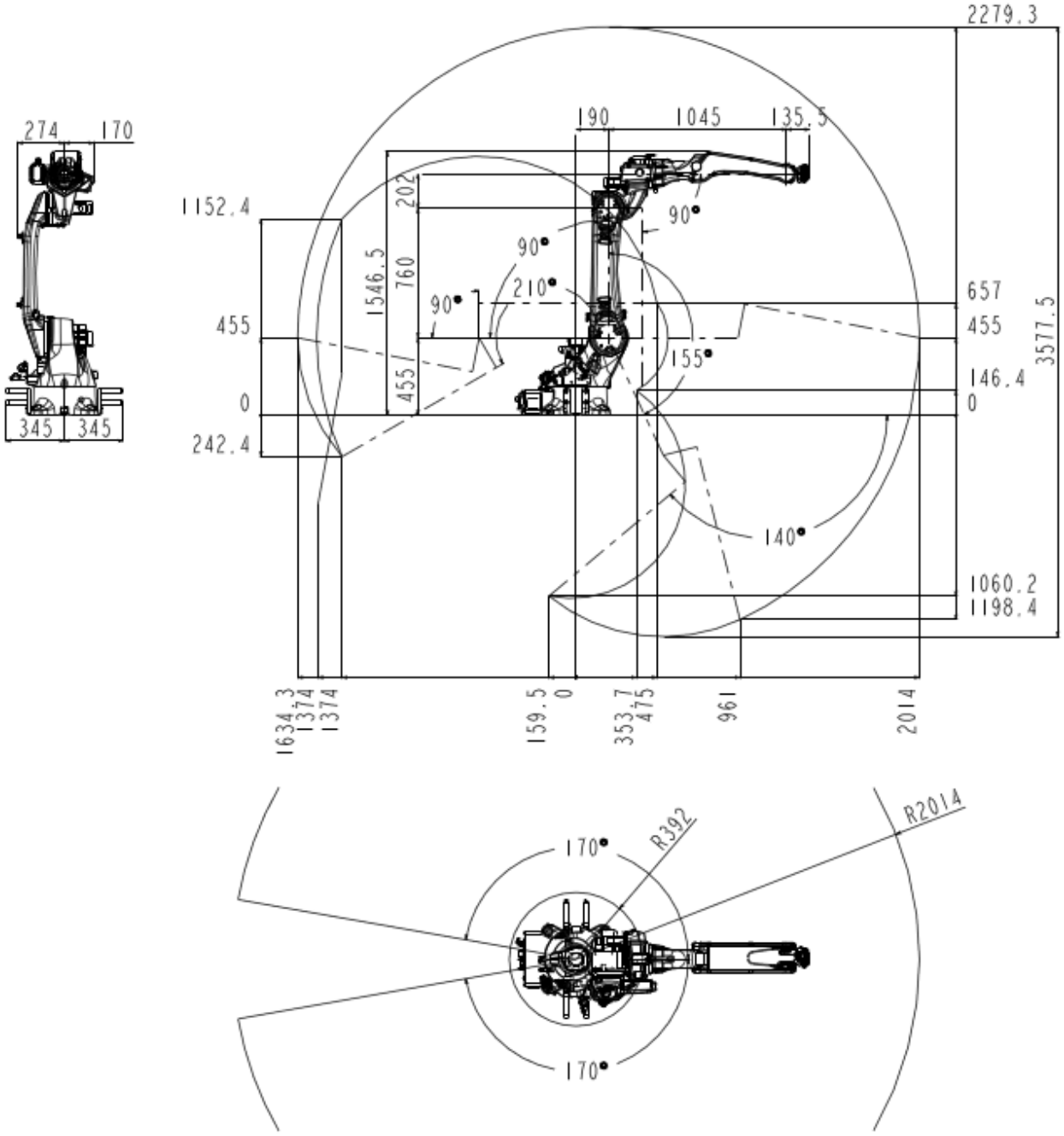

4. QJR6-2000H robot base installation dimension drawing

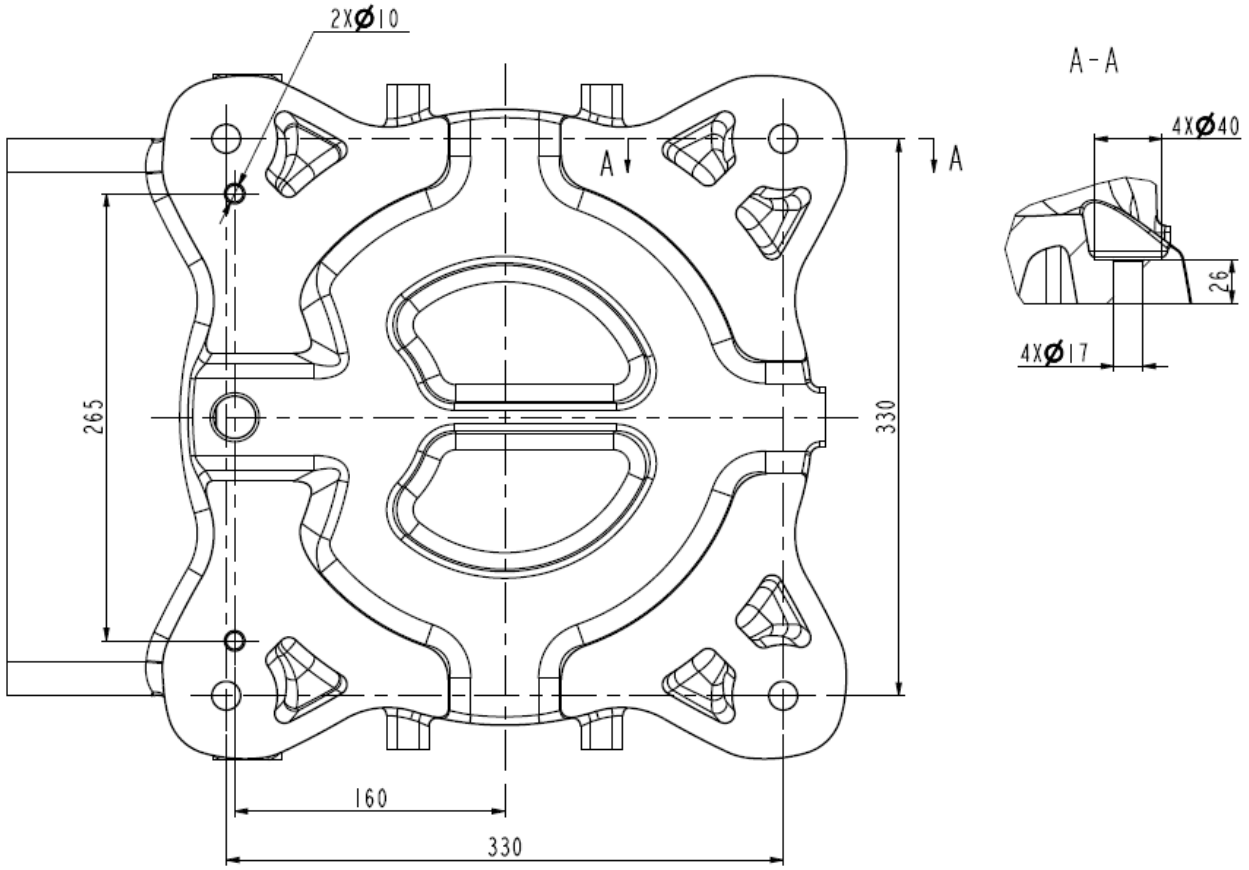

5. QJR6-2000H robot end installation dimension drawing

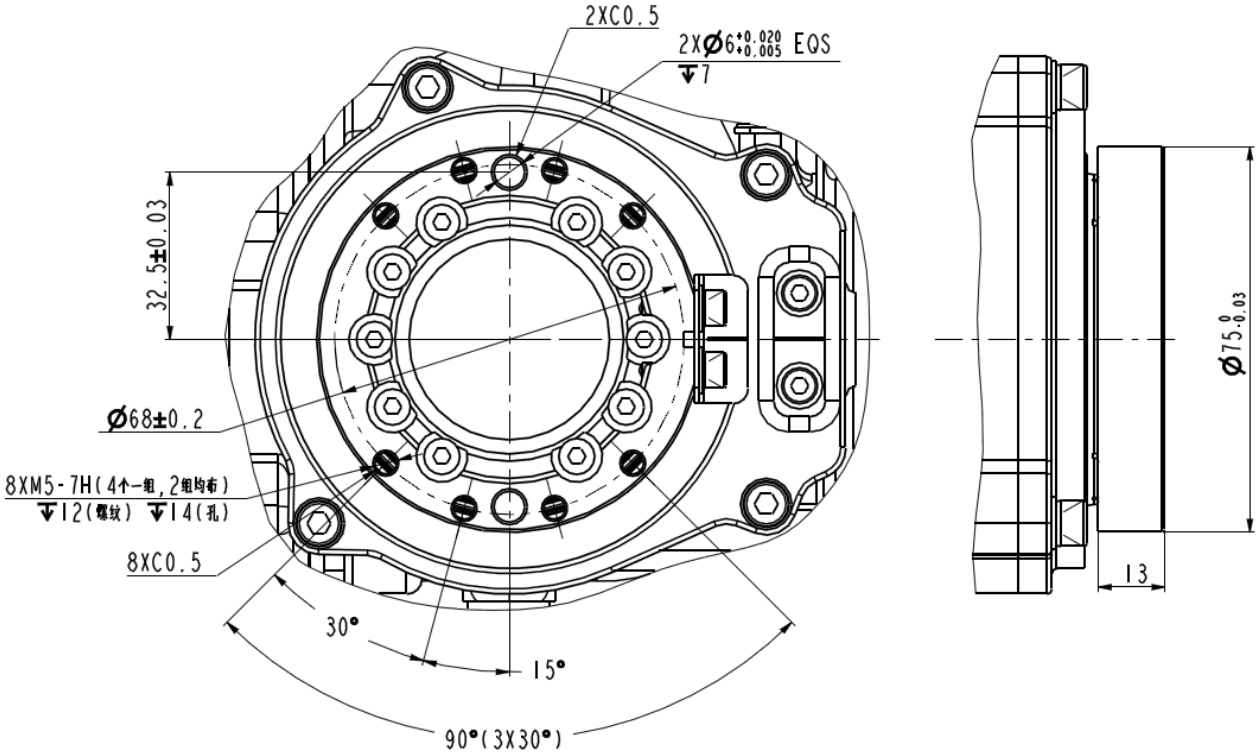

6、 Position diagram of reserved gas circuit and I / O interface of robot

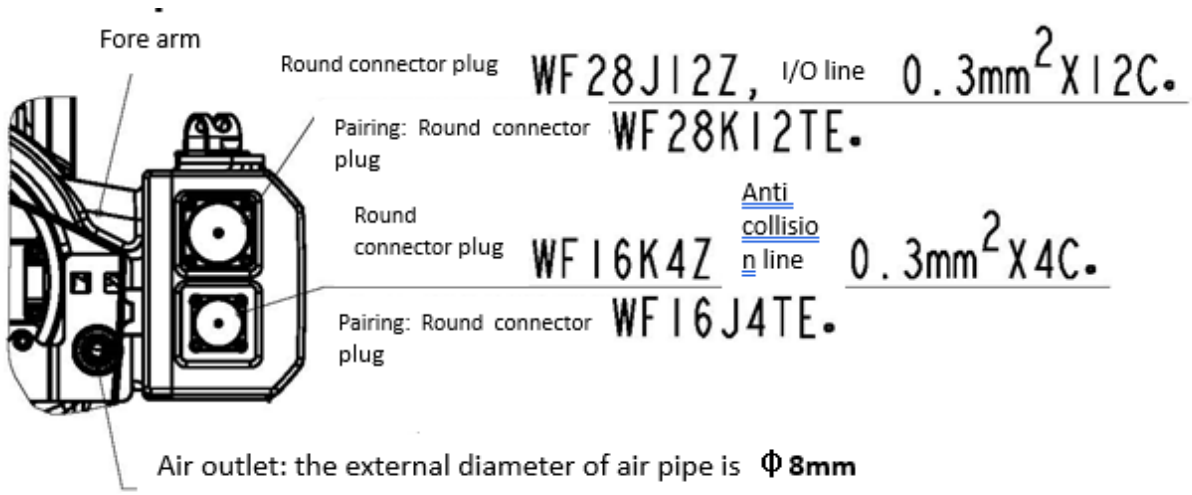

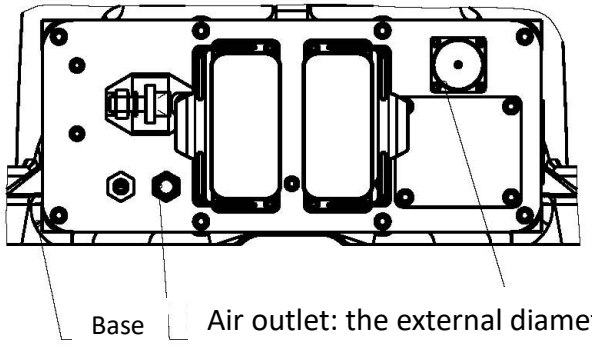

Round connector plug **WF28JI2Z-3，I/O line：0.3mm²**
×12C
Pairing: Round connector plug **WF28KI2TE-3**，
10A cold pressing female **YK1.5-20.4-1.OAU**
（1.OAU is optional according to the need）

7. Finished product configuration table of QJR6-2000H robot

Finished product configuration table of QJR6-2000H robot	
electric machinery	Gaohuachuangke motor
RV Reducer	Domestic
Harmonic Drive	Shimpo
controller	QJAR
Driver	Tsino Dynatron

8. QJR6-2000H control cabinet configuration information

QJR6-2000H Control cabinet	
Control hardware	QJAR controller (R5 version IO board)
Control cabinet software	QJAR
Power Supply	3 Phase 4 wire AC380V(+10%,-10%)
Rated power	5.7KW
Power capacity	3.5KVA
Control cabinet size	580x650x960mm
Weight of control cabinet	130kg
ambient temperature	0-45℃
Maximum humidity	20%~80% RH (No condensation)
Degree of protection	IP54
operation panel	On the control cabinet
Programming unit	Color touch screen teaching pendant
Security	Emergency stop, automatic mode stop, remote mode stop
Input and output	Digital IO 15 input 21 output