QJAR

QJR210-1



HASKOM Automation
"We Understand Robotics"

Authorized distributor HASKOM Automation s.r.o.
Find out more at qjar.eu

CE

Specifications and Drawings of QJR210-1

I. QJR210-1 Robot basic specification table

QJR210-1Basic specification sheet			
Body shape		Vertical multiarticular	
Degrees of freedom		6	
The payload		210Kg	
Arm span		2683.4mm	
Repeated positioning accuracy		±0.2mm	
Mechanical limit range	J1	±167°	
	J2	+86° , -51°	
	J3	+82° , -168°	
	J4	±360°	
	J5	±121°	
	J6	±360°	
Maximum speed	J1	1.66 rad/s	95 °/s
	J2	1.36 rad/s	77 °/s
	J3	1.55 rad/s	88 °/s
	J4	2.09 rad/s	119 °/s
	J5	2.09 rad/s	119 °/s
	J6	3.49 rad/s	199 °/s
Maximum acceleration	J4	1200 N·m	
	J5	1200 N·m	
	J6	650 N·m	
Allow the torque	J4	84 kg·m^2	
	J5	84 kg·m^2	
	J6	55 kg·m^2	
Body weight		1200 kg	
Protection level		IP65	
Installation environment	temperature	0~45 ℃	
	humidity	20%~80% RH(No condensation)	
	vibration	<4.9m/s2 (0.5g)	
	other	Avoid flammable, corrosive gases and liquids; Avoid contact with water, oil, dust, etc. Keep away from electrical noise sources.	
The power capacity		26KVA	

Control cabinet size	650×750×1150 mm
Control cabinet weight	130kg
Power supply	Three phase four wire AC380V (+ 10%, -10%)

II. QR210-1Diagram of the robot's overall size and maximum motion range

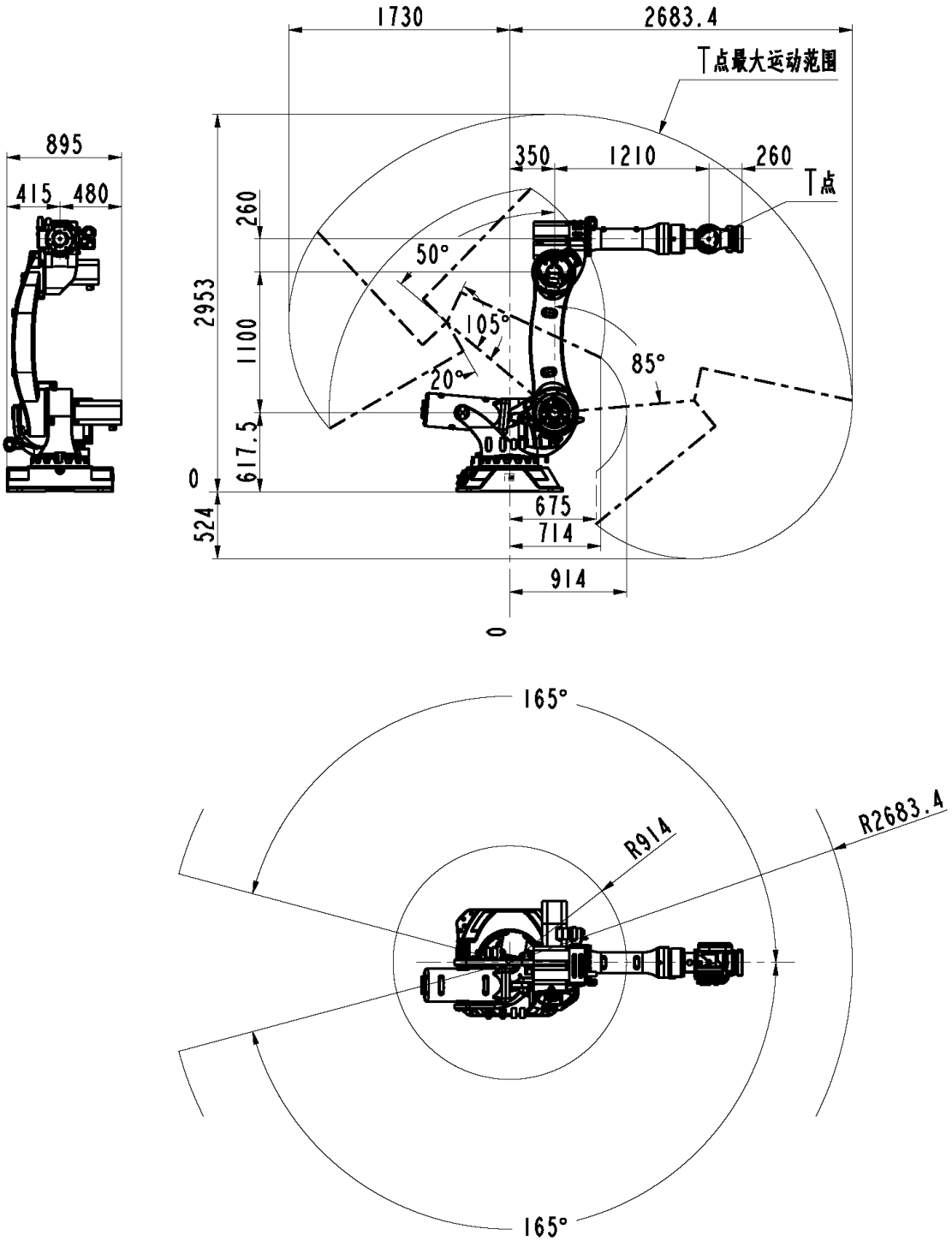
1730
2683.4
T点最大运动范围
895
415
480
350
1210
260
T点
260
50°
2953
1100
105°
85°
20°
617.5
0
524
675
714
914
0
165°
R914
R2683.4
165°

III. QR210-1 Robot base mounting dimension drawing

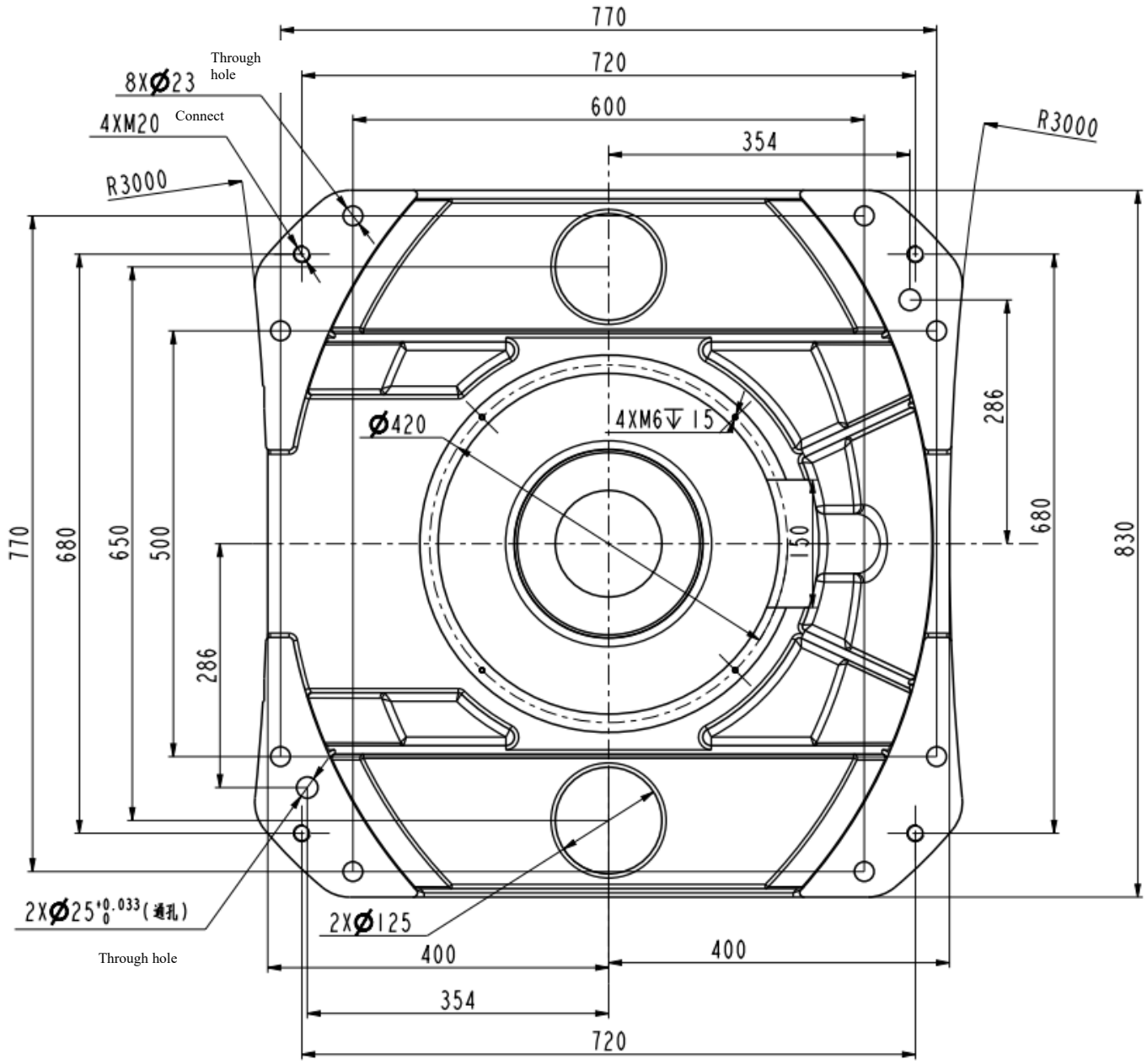

IV .QR210-1 Robot Load Chart

Load chart
The center of 5 axis is zero point

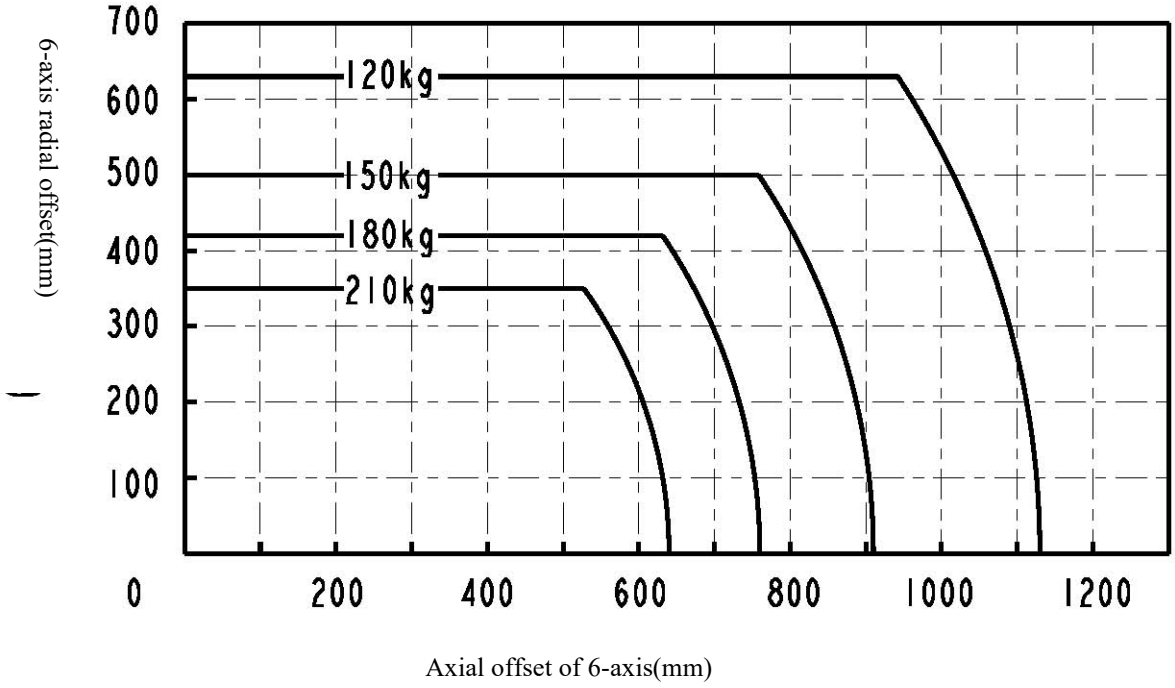

Axial offset of 6-axis(mm)

V. QR210-1 Installation dimension drawing of robot end

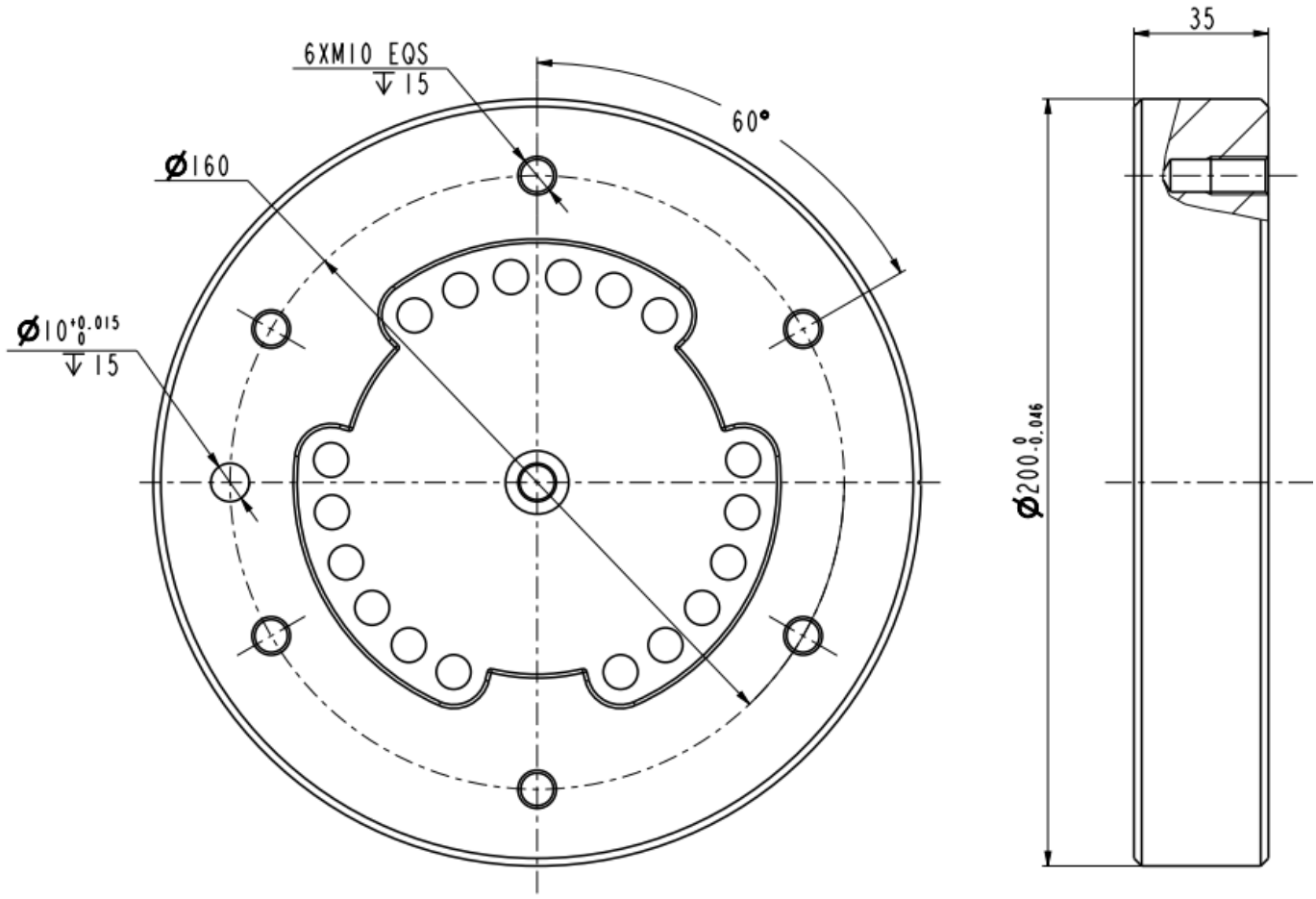

VI. Schematic diagram of robot reserved gas path and I / O interface position

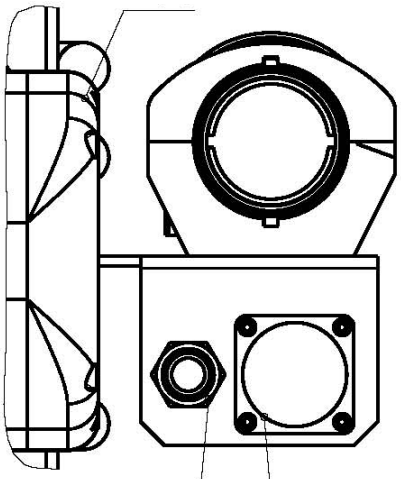

Air outlet： the external diameter of air pipe is ϕ12mm

Round connector plug **WY40J3IZ-3，I/O line：0.2mm² ×12P**
Pairing: Round connector plug **WY40K3ITE-3**，
Cold pressing female **YK1.5-22.6-0.37AU**
（0.37AU is optional according to the need）

Air inlet： the external diameter is ϕ12mm

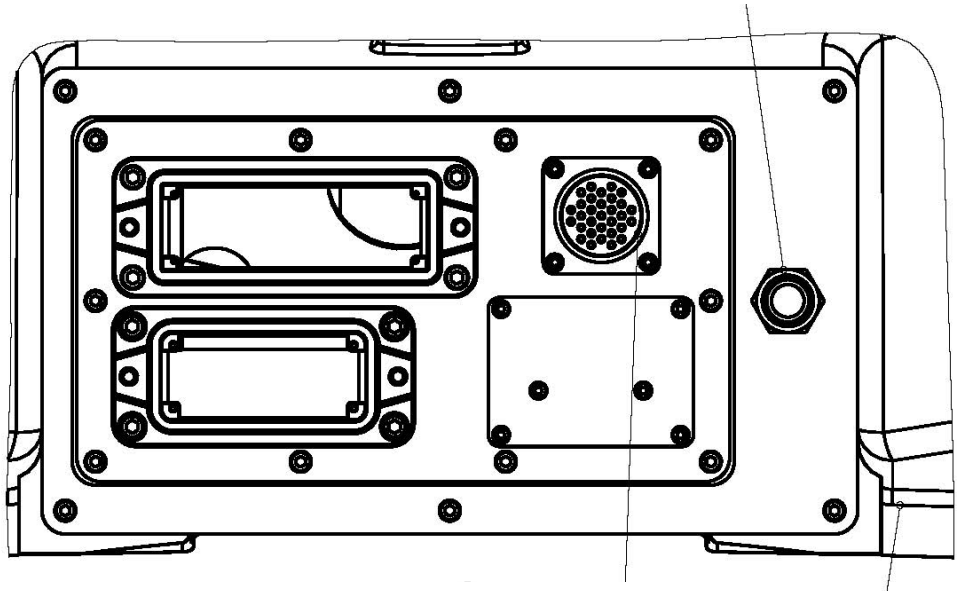

Round connector plug **WY40J3IZ-3，I/O line：0.2mm² ×12P**
Pairing: Round connector plug **WY40K3ITE-3**，
Cold pressing female **YK1.5-22.6-0.37AU**
（0.37AU is optional according to the need）

底座 Base

explain:
The base and the fore arm position circular connector plug are connected in the same position

Ⅶ.QJR210-1 Finished robot configuration table

QJR210-1 Finished robot configuration table	
Motor	FinePower
RV reducer	Nabtesco
Controller	KEBA
Drive	TSINO DYNATRON

Ⅷ.QJR210-1Configuration information of Controller cabinet

QJR210-1controller cabinet	
Control hardware	KEBA
Control cabinet software	KEBA
Power Supply	Three phase four wire AC380V (+ 10%, - 10%)
Rated power	36.0KW
Power capacity	30.6KVA
Size of control cabinet	650x750x1150mm
Weight of control cabinet	140kg
ambient temperature	0-45℃
Maximum humidity	20%~80% RH（no condensation）
Protection level	IP54
operation panel	On the control cabinet
Programming unit	Color touch screen teaching box
Security	Emergency stop, automatic mode stop, remote mode stop
Input and output	Digital IO, 22 input, 22 output