# QJRH4-1A



"We Understand Robotics"

**Authorized distributor HASKOM Automation s.r.o.**
**Find out more at qjar.eu**

CE

# Specifications and Drawings of QJRH4-1A

## I. QJRH4-1A Robot basic specification table

| QJRH4-1A Basic specification sheet | | | |
|---|---|---|---|
| Body shape | | Vertical multiarticular | |
| Degrees of freedom | | 6 | |
| The payload | | 4kg | |
| Arm span | | 1410.5mm | |
| Repeated positioning accuracy ^2 | | ±0.03mm | |
| Mechanical limit range | 1axis | ±168° | |
| | 2axis | +150° , -89° | |
| | 3axis | +85° , -111° | |
| | 4axis | ±167° | |
| | 5axis | +58° , -217° | |
| | 6axis | ±360° | |
| Maximum speed | 1axis | 3.5 rad/s | 200.5°/s |
| | 2axis | 3.5 rad/s | 200.5°/s |
| | 3axis | 4.1 rad/s | 234.9°/s |
| | 4axis | 6.1 rad/s | 349.5°/s |
| | 5axis | 6.2 rad/s | 355.2°/s |
| | 6axis | 8.4 rad/s | 481.2°/s |
| Maximum acceleration | 1axis | 15 rad/s2 | 859.4°/s2 |
| | 2axis | 12.5 rad/s2 | 716.1°/s2 |
| | 3axis | 20 rad/s2 | 1145.9°/s2 |
| | 4axis | 50 rad/s2 | 2864.7°/s2 |
| | 5axis | 45 rad/s2 | 2578.3°/s2 |
| | 6axis | 60 rad/s2 | 3437.7°/s2 |
| Allow the torque | 4axis | 10.51 N.m | |
| | 5axis | 10.51 N.m | |
| | 6axis | 2.94 N.m | |
| Inertia moment | 4axis | 0.38 kg.m2 | |
| | 5axis | 0.38 kg.m2 | |
| | 6axis | 0.03 kg.m2 | |
| Body weight | | 150 kg | |
| Installation environment | tempe rature | 0~45 ℃ | |
| | humid ity | 20%~80% RH(No condensation) | |
| | vibrati | <4.9m/s2 (0.5G) | |

| | | |
|---|---|---|
| | on | |
| | other | Avoid flammable, corrosive gases and liquids;<br>Avoid contact with water, oil, dust, etc.<br>Keep away from electrical noise sources. |
| The power capacity | | 2.7kVA |

## II. QJRH4-1A Diagram of the robot's overall size and maximum motion range

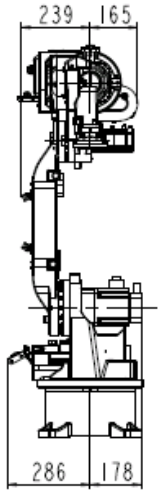


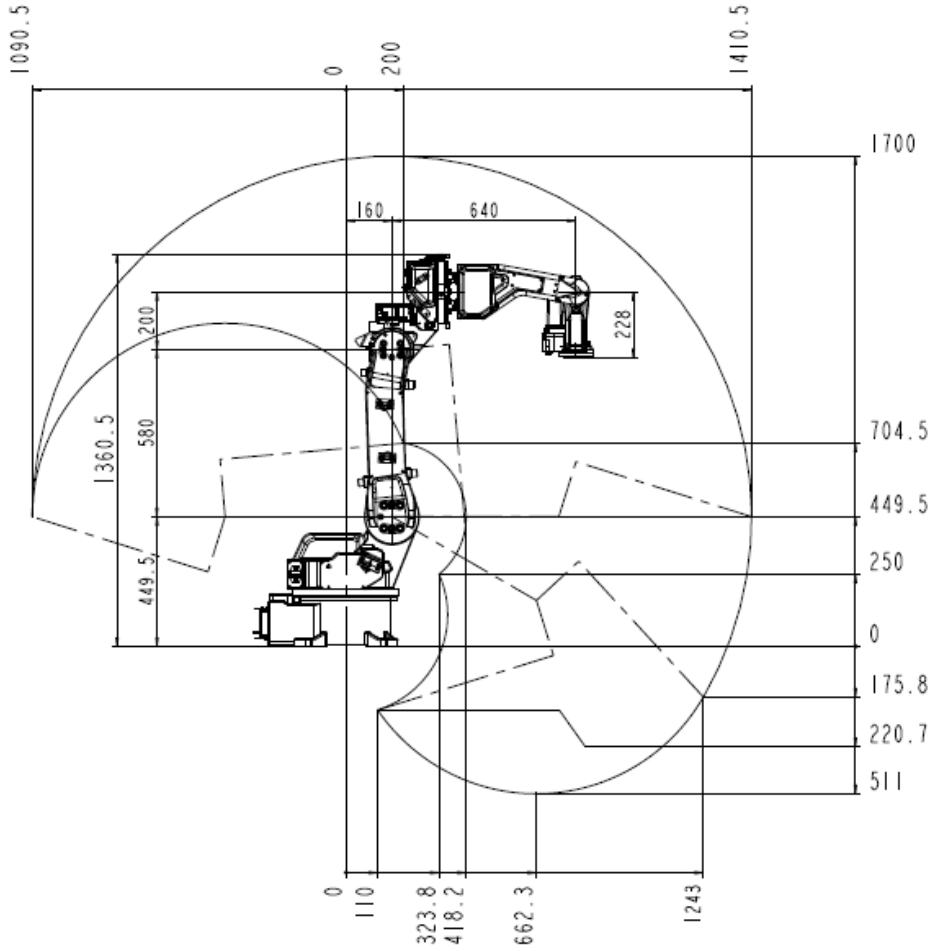


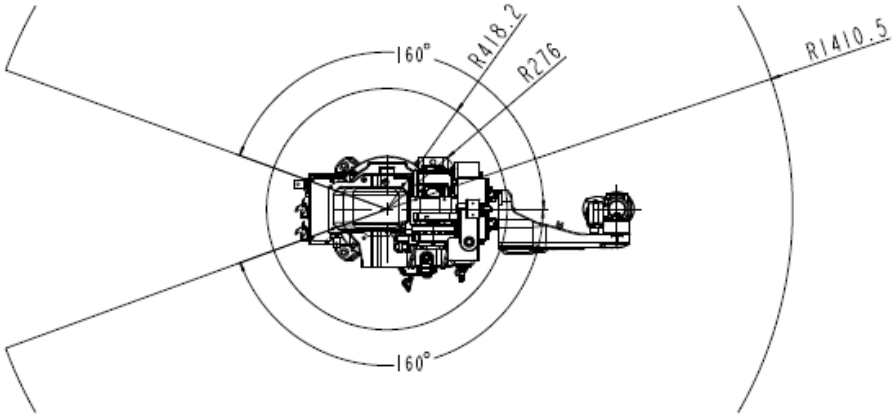

## III. QJRH4-1A Robot base mounting dimension drawing

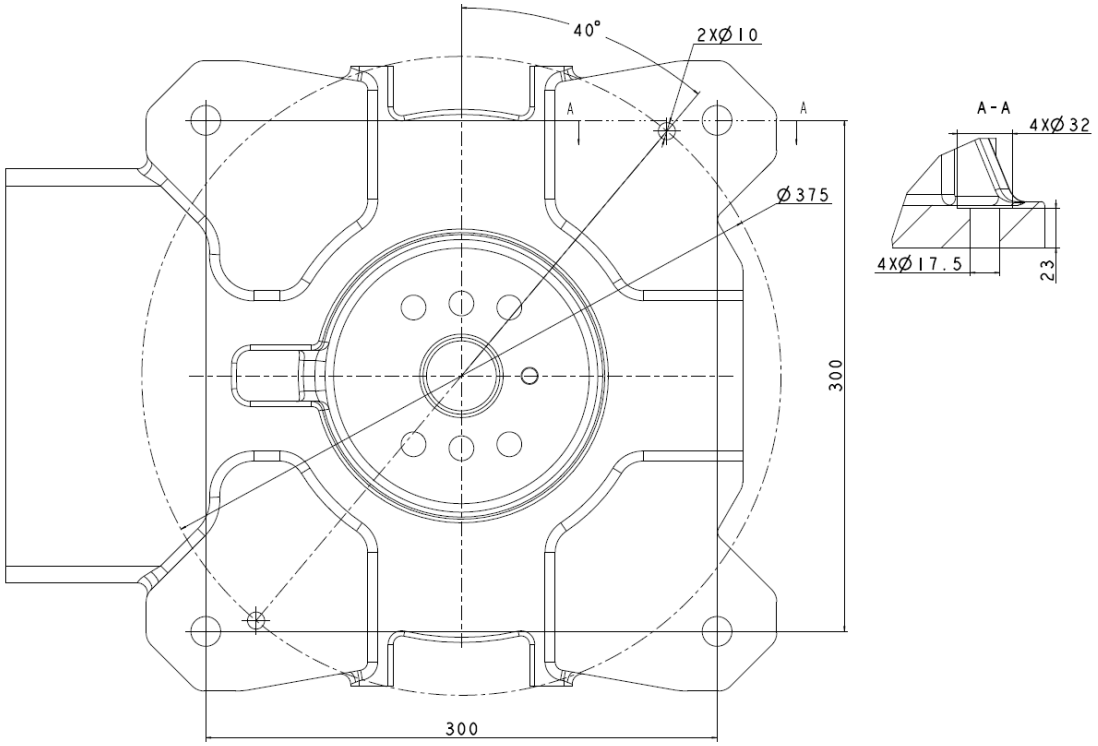


## IV. QJRH4-1A Installation dimension drawing of robot end

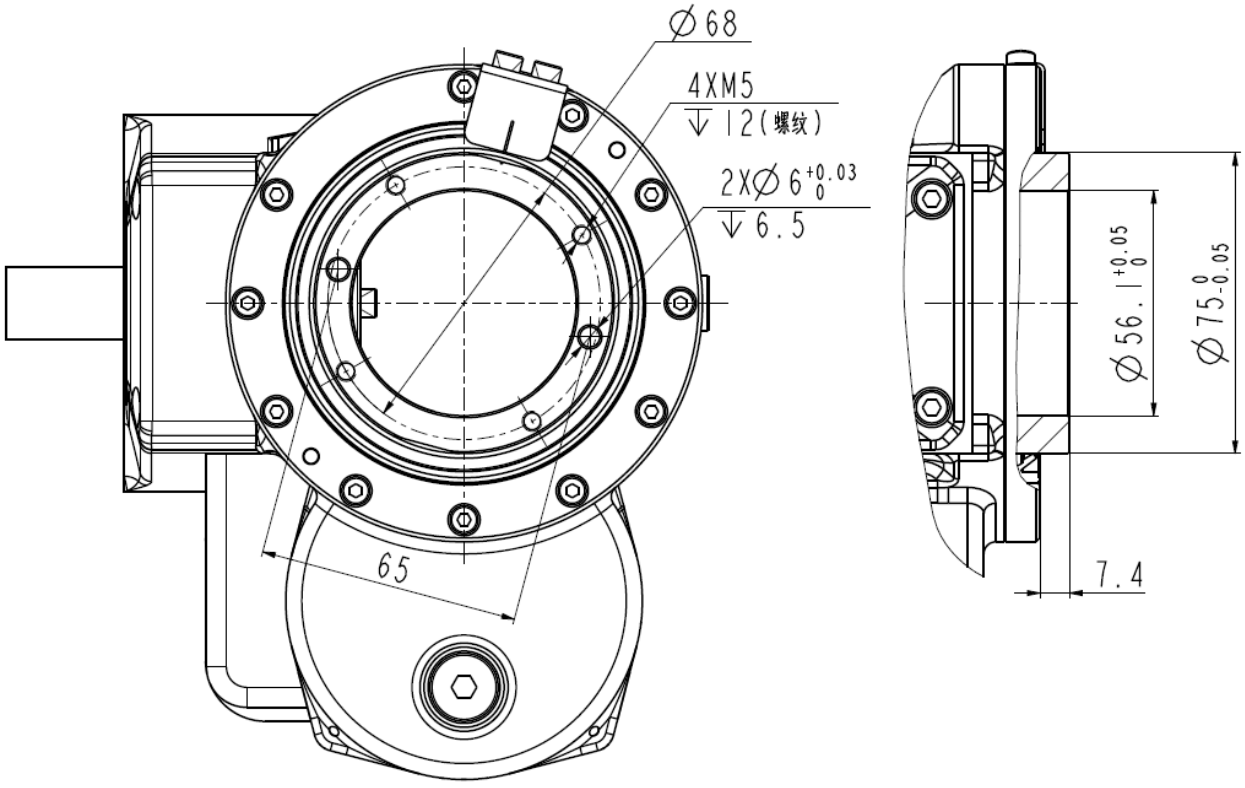

# V. QJRH4-1A load capacity diagram

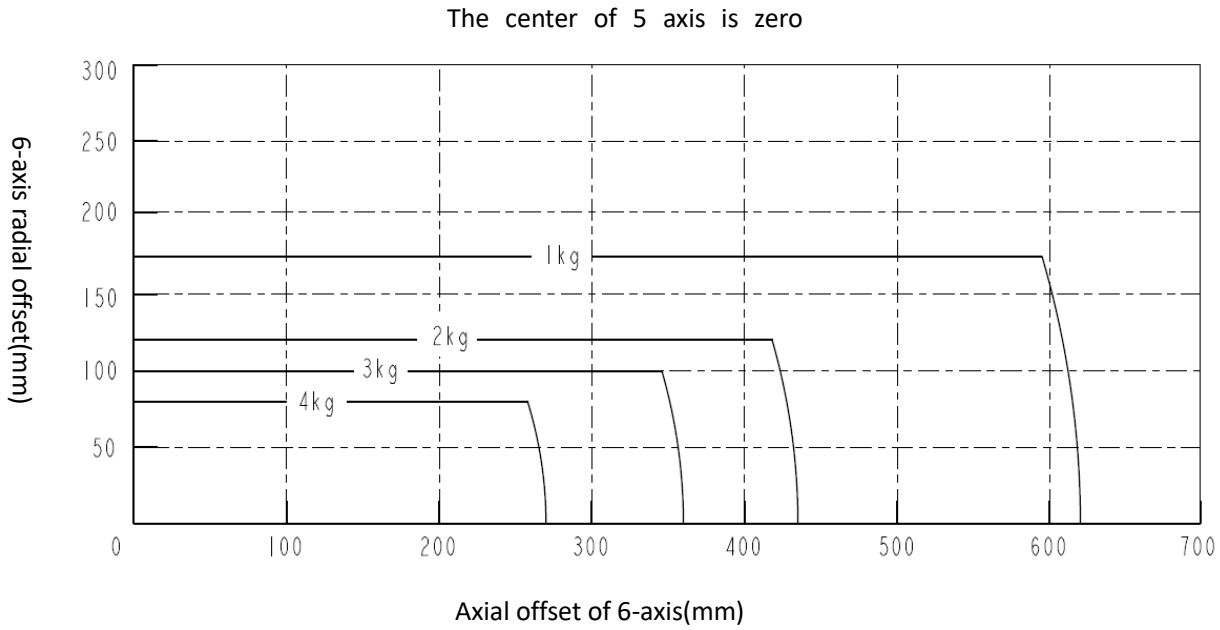

# VI. Schematic diagram of robot reserved gas path and I / O interface position

Round connector plug WF28JI2Z, I/O line: 0.3mm$^2$ ×12C
Pairing: Round connector plug 28KI2TE

Fore arm

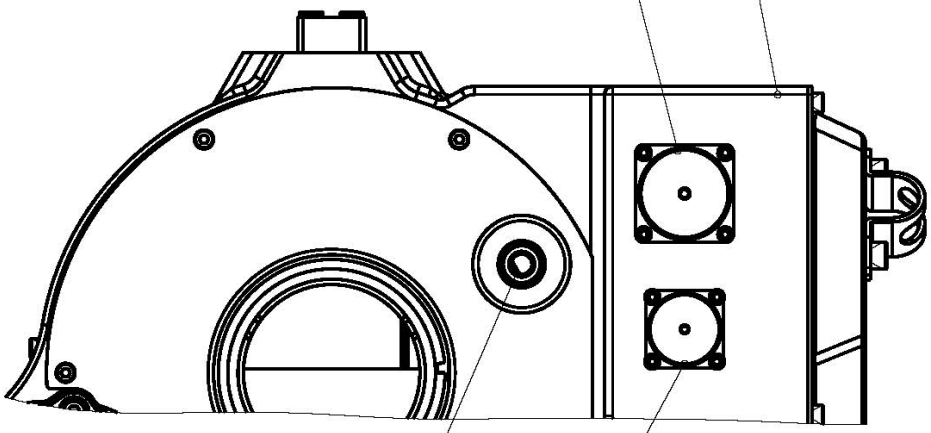

Air outlet：the external diameter is Φ8mm

Round connector plug WFI6K4Z, anti-collision line: 0.3mm$^2$ ×4C
Pairing: Round connector plug WF16J4TE

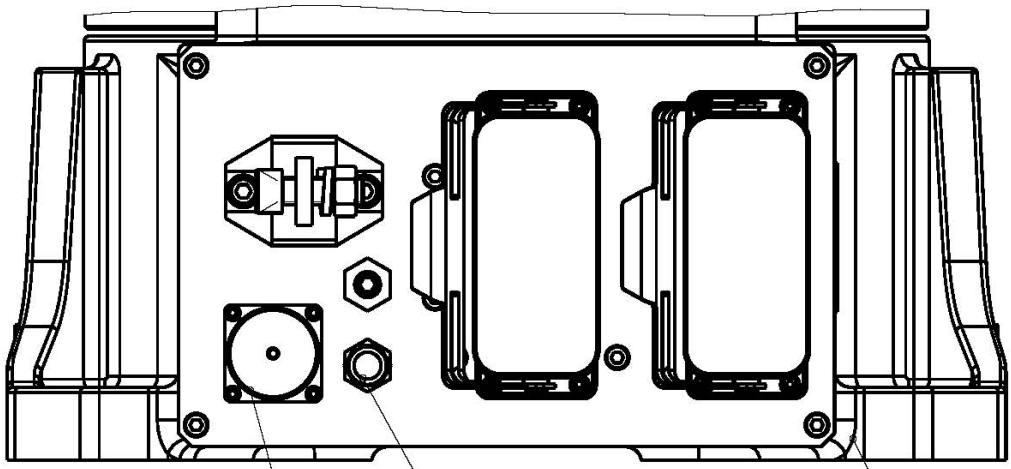

Base

Air inlet：the external diameter is Φ8mm

Round connector plug **WF28JI2Z-3，I/O line：0.3mm$^2$ ×12C**
Pairing: Round connector plug **WF28KI2TE-3**，
10A cold pressing female **YK1.5-20.4-1.OAU**
（1.OAU is optional according to the need）
explain:
The base and the fore arm position circular connector plug are connected in the same position

## VII. QJRH4-1A Configuration table of robot products

| QJRH4-1A Configuration table of robot products | |
|---|---|
| Motor | TAMAGAWA/Gaohua |
| RV Reducer | Nabtesco/Domestic ones |
| Harmonic reducer | Shimpo |
| Controller | QJAR |
| Drive | Tsino dynatron |

## VIII. QJRH4-1A Controller cabinet

| QJRH4-1A controller cabinet | |
|---|---|
| Control hardware | QJAR controller(R5 version IO board) |
| Control cabinet software | QJAR operating system |
| Power Supply | Three phase four wire AC380V(+10%,-10%) |
| Rated power | 4.5KW |
| Power capacity | 2.7KVA |
| Size of control cabinet | 580x600x960mm |
| Weight of control cabinet | 130kg |
| ambient temperature | 0-45℃ |
| Maximum humidity | 20%~80% RH ( no condensation ) |
| Protection level | IP54 |
| operation panel | On the control cabinet |
| Programming unit | Color touch screen teaching box |
| Security | Emergency stop, automatic mode stop, remote mode stop |
| Input and output | Digital IO 7 input 13 output，analog 2output |